QSV350B6S

DIESEL GENSET SPECIFICATION

350kVA (PRP) / 385kVA (ESP)

ID：1000037378

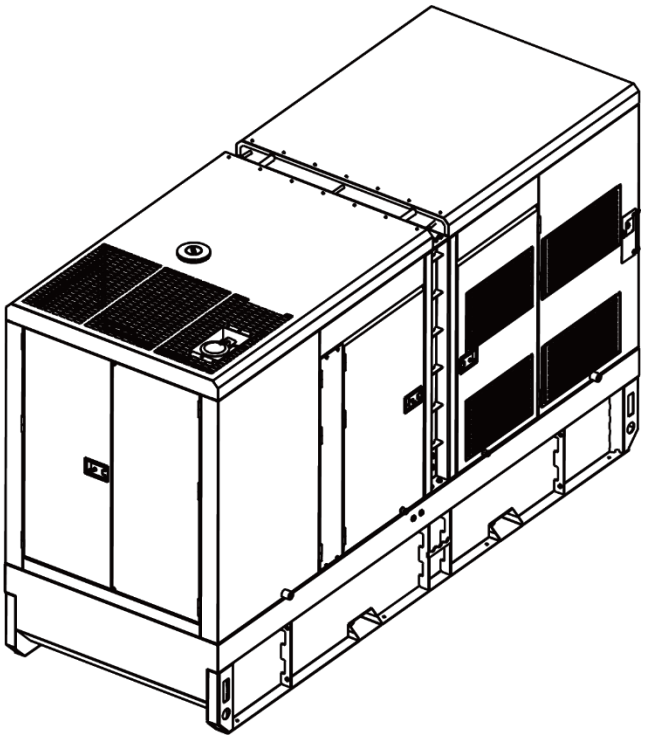

Diesel Genset Specification

QSV350B6S

General technical data

Model	QSV350B6S	Rated voltage V	Current A
Structure	PT	208	971.5314
Prime power (PRP)：kVA / kW	350 / 280	220	918.5387
Standby power (ESP)：kVA / kW	385 / 308	230	878.6023
Frequency: Hz	50	240	841.9938
Rotate speed: RPM	1800		
Phase: P	3		
Power factor: cosφ	0.8	Load	Fuel consumption L/h
Protection class	IP54	25%	N/A
Noise level: dB@7m	75.7	50%	N/A
Tank capacity: L	1550	75%	N/A
Dimensions: mm	4300x1693x2555	100%	N/A
Dry weight: kg	5003	110%	88.9

Main Features

Advantage	Design Standards	Environmental Operating Conditions
• Low fuel consumption • Optimized system • High reliability • High availability	• Conformite Europeenne (CE) • ISO8528-5:2005	• Installation place: outdoor / indoor (well ventilated). • Ambient temperature: -25℃ to 45℃ (the coolant heater is needed when the temperature is below 5℃) • Humidity: Less than 80% • Altitude: Below one thousand (1000) meters.

Factory Inspection	Service Support	Performance Guarantee
• Protection devices working test • Starting ability in normal temperature • 50% rated power load moment capability • Load test :0, 25%, 50%, 75%, 100%, 110%	• Global product service support	• Product design, manufacturing and performance have been verified by standards • Generator set has passed transient response test according to ISO8528-5 • Both engine and alternator have passed prototype factory testing.

Diesel Genset Specification

QSV350B6S

Power System

Engine

Manufacturer / brand	Baudouin	Intake system	Turbocharged
Model	6M16G308/6	Intake resistance: kPa	≦3.5
Cylinders	6L	Exhaust back pressure: kPa	≦7.0
Bore: mm	126	Oil capacity: L	26
Stroke: mm	130	Coolant capacity: L	22
Displacement: L	9.7	Battery voltage: V	24
Compression ratio	17.0	Dimensions: mm	2062×1100×1300
Rotate speed: RPM	1800	Dry weight: kg	1070
Prime power: kWm	327		
Standby power: kWm	360		
Rotate speed governor	Mach		
Type of fuel Injection	Direct		

Alternator

Manufacturer / brand	Stamford	Insulation class	H
Model	S4L1D-E	Temperature rising class	H
Exciter	PMG	Protection class	IP23
Windings	100% copper	Voltage regulation	±1.0%
Winding pitch	2/3	Telephone harmonic factor THF	<2%
Number of poles	4	Telephone interference factor TIF	<50
Terminals	12		

Control System

Brand	DSE
Model	DSE-6120

General Functions

- Automatic start / stop control
- Manual/remote start control
- Real time monitoring and display of multiple parameters
- RS232, RS485 interface and Ethernet can be used simultaneously
- CAN and Modbus communication
- Provide complete control solutions

Monitoring and protection

Oil pressure	Over load
Water temperature	Over current
Rotate speed	Over voltage
Start	Under voltage
Running time	Over frequency
Battery voltage	Under frequency
……	……

Product Appearance

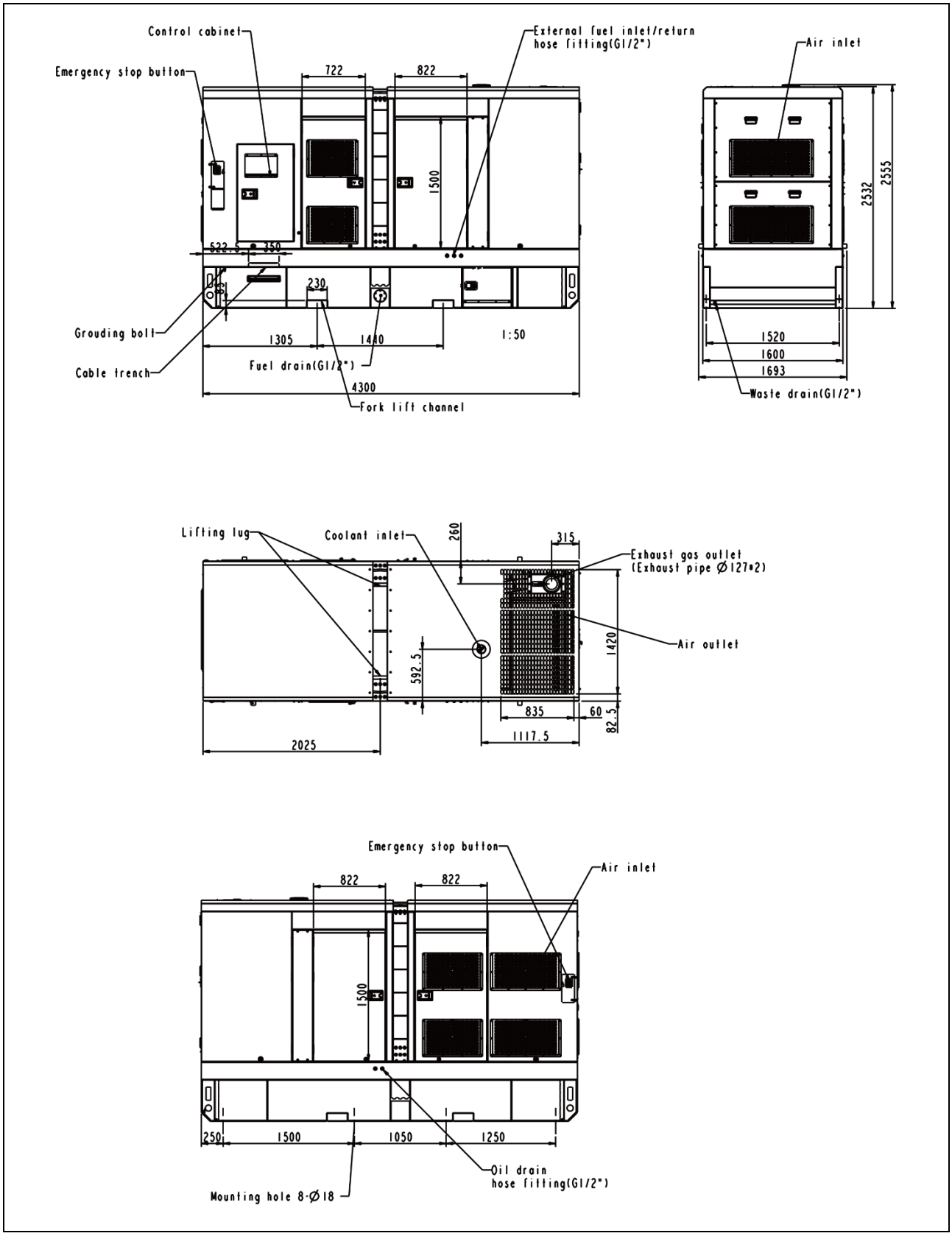

Product Configuration

Standard configuration

Engine	Generator	Control switchgear	Canopy (sound-proof)	Base Frame
Electrical start motor	Alternator	PLC control system	SECC Electrogalvanized sheet	Steel base frame
Battery system	H class insulation	Main circuit breaker	Corrosion-resistant coating	Engine bracket
Speed control system	H class temperature rising	Breaker cabinet	Access door	Alternator bracket
Turbocharged	IP23 protection	Communication connector	Stainless steel hinge	Radiator bracket
Lockable isolator switch	AVR voltage regulator	ATS connector	Sound absorbing cotton	Vibration isolators
Battery charger		Mains floating charger		

Fuel system	Lubrication system	Cooling system	Intake / exhaust system	Service documents
Base frame fuel tank	Oil pressure sensor	55℃ radiator	Air filter	Installation and operation manual
Fuel level sensor	Oil temperature sensor	Water level sensor	Exhaust muffler	Test report
Flexible connection pipe	Oil filter	Jacket water pipe	Exhaust bellow	Circuit diagram
Fuel filter	Manual oil drain pump	Intercooling pipe	Exhaust pipe and flange	Warranty manual
	Oil drain ball valve		High temperature protective sleeve	Engine operation and maintenance manual
				Standard package

Optional configuration

Engine	Alternator	Control switchgear	Fuel system	Lubrication system
Jacket water preheater	Anti-condensation heater	4P Circuit breaker	Fuel three-way valve	Electric oil drain pump
Oil preheater	Treatments against humidity and corrosion	ATS cabinet	Daily fuel tank	

Power Class Definition

- Prime Power (PRP): the unit runs continuously with variable load, the number of operating hours is not limited, and 1h overload 10% operation is allowed per 12h, and the average load factor is less than 70% per 24h.
- Standby Power (ESP): operating time does not exceed 500h per year, continuous operating time does not exceed 300h, the average load factor is less than 80% per 24h. Overload operation is not allowed.

Product Statement

- The data of specifications is based on the following standard environmental test conditions.
  - Ambient temperature 25℃
  - Altitude 100m
  - Relative humidity 30%
- Dimensions, weight and other parame0ters are for reference only, which shall be subject to the final design drawing.